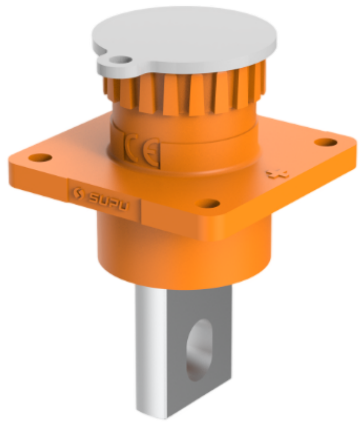

Product Type: IP67 connector

Product Name:ESF-RS300A95YL

Product Description: Connectors suitable for energy storage modules Color: Orange Rated voltage: 1500V DC Rated current: 300A Connection method: Nuts Contact type: Pin wire cross-section: 95mm^2 cable outer diameter: 15.2mm to 17.7mm

Product Size

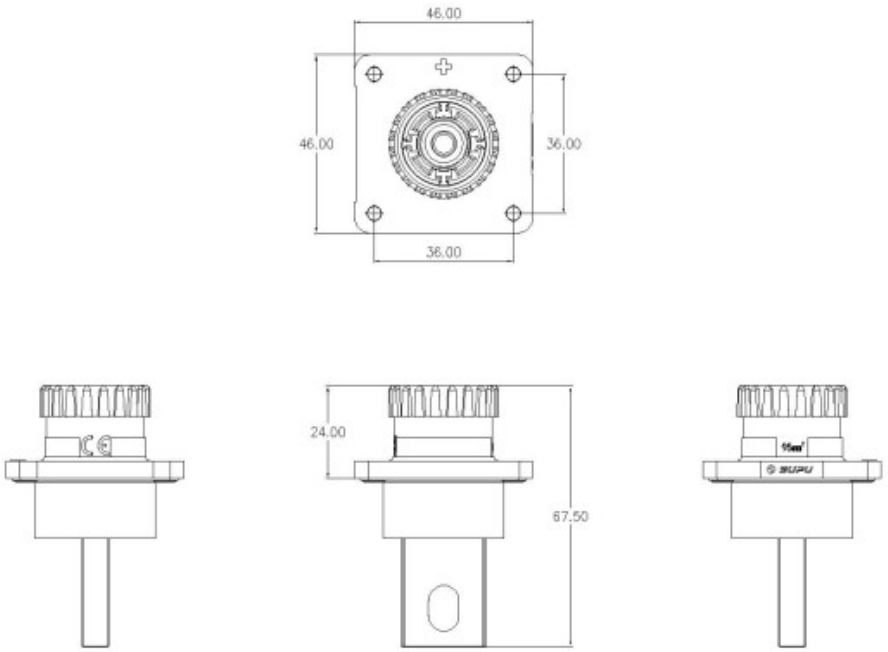

Parameters

SUPU ID	ESF-RS300A95YL
Number of connections	1
Connection method	Bolt connection
Protection Level	IP 67

Operating temperature range	-40°C~+125°C
Insulation material	III
Insulation material group	III
Contact material	Copper alloy
Contact plating	Ag,Plated
Insertion/withdrawal cycles	100
Insertion force	≤75N
Withdrawal force	≥10N

Technical data

IEC Rated Current	300A
IEC Rated Voltage	1500V DC
Overvoltage category	III
Degree of pollution	3
Rated impulse voltage	12.3KV
Stripping length	20±1mm
Rated cross section(AWG)	3/0 AWG
External cable diameter	15.2mm~17.7mm

Commercial data

Order No	ESF-RS300A95YL
Packing unit	Pcs
Minimum order quantity	1
Single piece weight	85g

Ningbo SUPU Electronics Co., Ltd.

Address: No. 150, Xinxing 4th Road, High-tech Industrial Development Zone,

Cixi City, Zhejiang Province, China

Zip code: 315303

Switchboard: +86 574-63288158

Fax: +86 574-63288170

E-mail:supucontact@supu.cn

Service Hotline: 400-626-6336

Wechat

The right to modify data belongs to SUPU.